PMC420412

Interactive 3D graphic, click to activate and rotate.

PRODUCT SERIES SPECIFICATIONS

Series: PMC12
Category: General Purpose
Temperature: 32°F-160°F (0°C-71°C)
Pressure: Vacuum to 120 psi, 8.3 bar
Sterilization Method: Gamma: Up to 50 kGy irradiation
Material Compliance
Reach: Compliant
RoHS: Compliant

For more information see cpcworldwide.com or contact us at cpcworldwide.com/ContactUs

The 1/8" flow polypropylene PMC12 offers many of the same configuration options as the PMC. The polypropylene material adds greater chemical resistance and is gamma sterilizable. The PMC12 also mates to small diameter rigid tubing. Available with a 1/4-28 flat bottom port and 1/4-28 UNF threads, these couplings eliminate the need to thread and re-thread common compression nuts each time a tubing connection is made.

Features - Benefits

Polypropylene material - Chemically resistant and gamma sterilizable
EPDM o-ring - Greater chemical resistance
CPC thumb latch - One-hand connection and disconnection
Integral terminations - Fewer leak points, shorter assemblies, faster installations

PMC12 Pressure Range

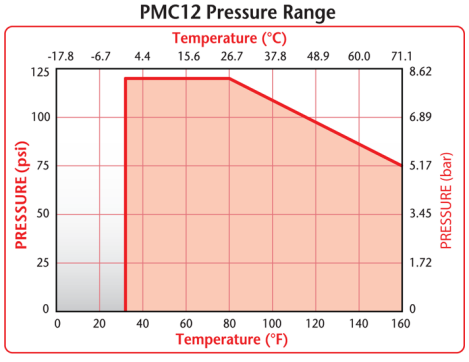

PMC12 Water Flow

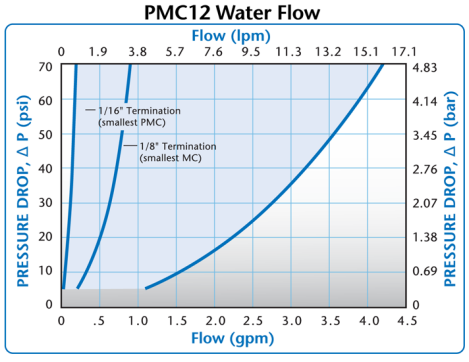

PMC12 Air Flow, 100 psig Inlet Pressure

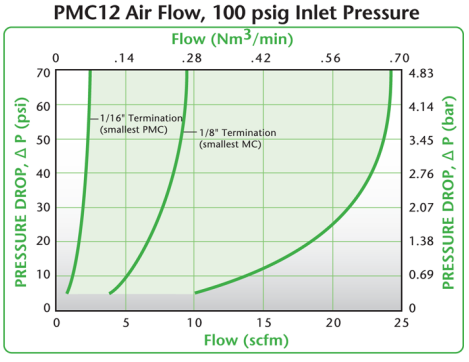

These graphs are intended to give you a general idea of the performance capabilities of each product line. Contact CPC for flow of a particular coupling combination.

PMC420412

Technical details:

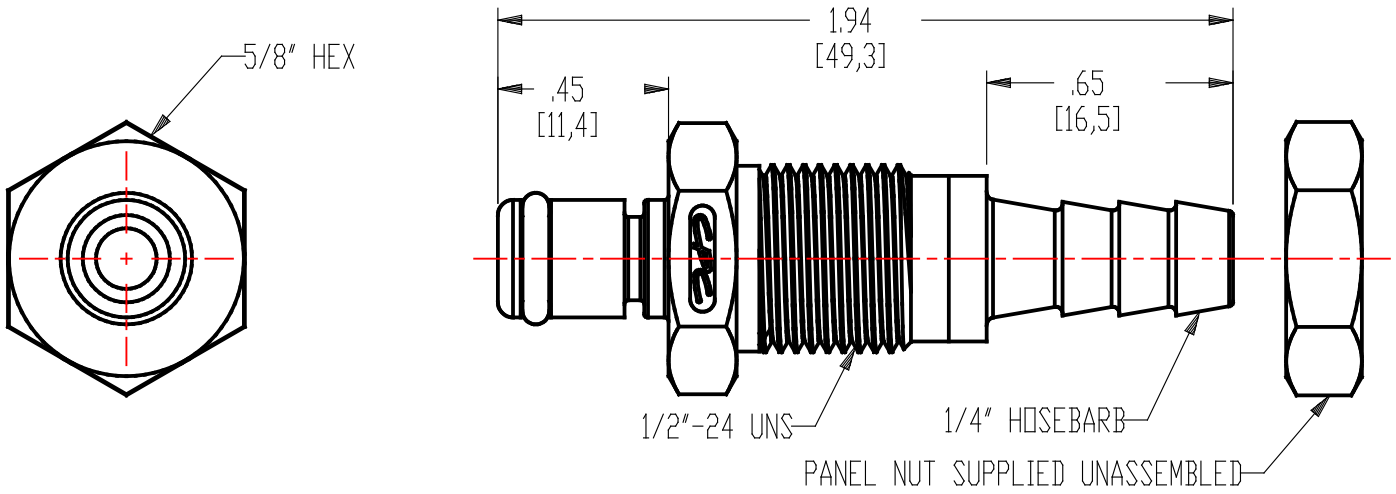

Description: 1/4 HB NV PM INSERT ASM PMC12

Materials:

Main Components: Almond Polypropylene
Seals: EPDM
Valve: N/A
Valve Spring: N/A
Other: Barrel Nickel Plated Brass Panel nut

Standard Packaging Quantity: 25