MC2302

Interactive 3D graphic, click to activate and rotate.

PRODUCT SERIES SPECIFICATIONS

Series: MC
Category: General Purpose
Pressure: Vacuum to 250 psi, 17.3 bar
Temperature: -40°F to 180°F (-40°C to 82°C)
Material Compliance
Reach: Compliant
RoHS: Compliant

For more information see cpcworldwide.com or contact us at cpcworldwide.com/ContactUs

CPC's MC Series chrome-plated brass couplings are built tough and made to last in the most demanding applications. Ideal for use with higher temperatures or pressures, MC Series couplings feature one-hand operation for swift and easy connects and disconnects. These couplings offer the flexibility of multiple configurations and terminations and mate with both PMC acetal and PMC12 polypropylene couplings.

Features - Benefits

Brass material - Durable and able to withstand higher pressure and temperature
High temperature capability - Versions rated to 400°F (204°C)
CPC thumb latch - One-hand connection and disconnection
Compatible - MC mates with PMC and PMC12 Series couplings

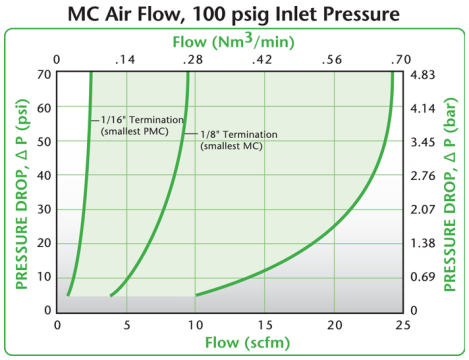

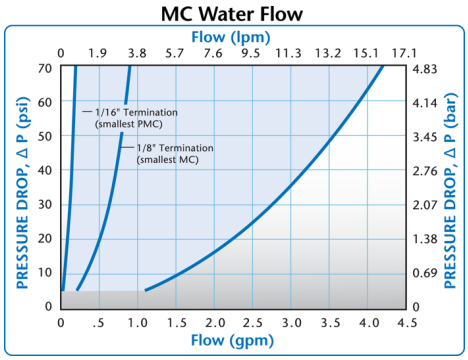

These graphs are intended to give you a general idea of the performance capabilities of each product line. Contact CPC for flow of a particular coupling combination.

Technical details:

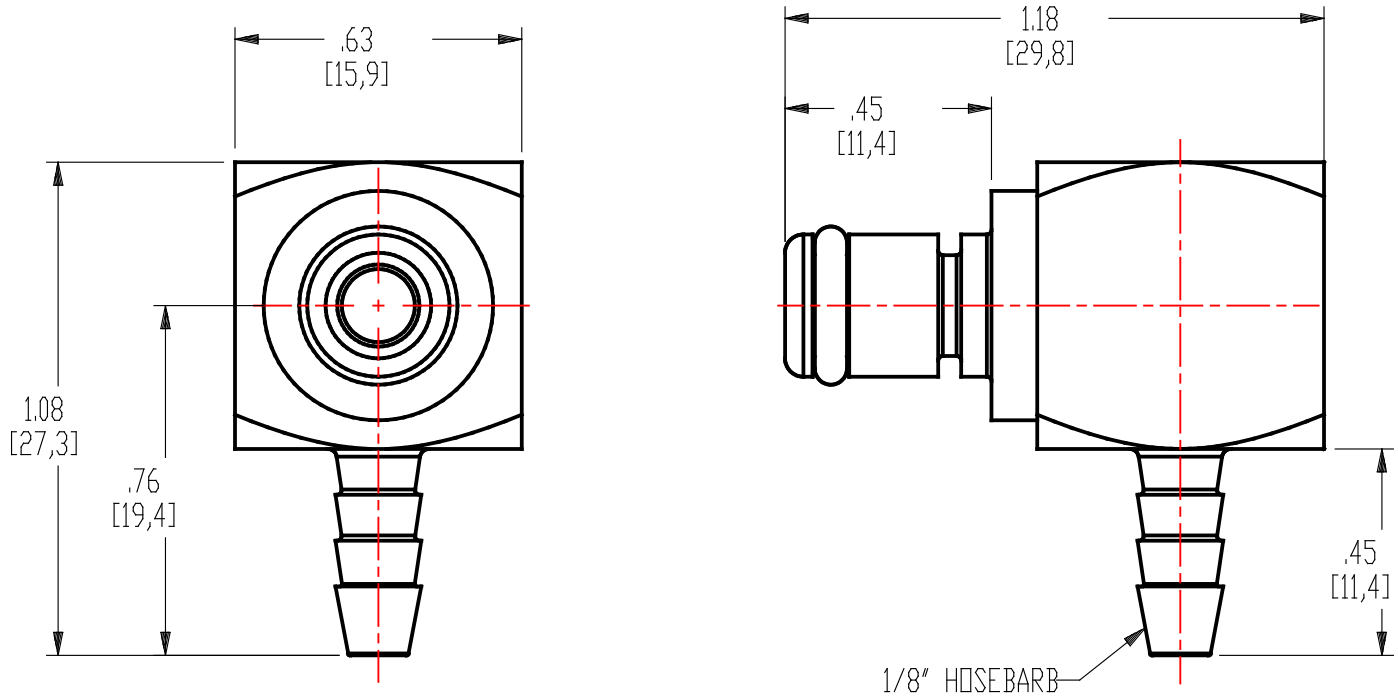

Description: 1/8" Hose Barb Non-Valved Elbow Coupling Insert

Materials:

Main Components: Chrome Plated Brass
Valve: N/A
Valve Spring: Natural Acetal
Seals: BUNA-N

Standard Packaging Quantity: 10