PLCD2300412

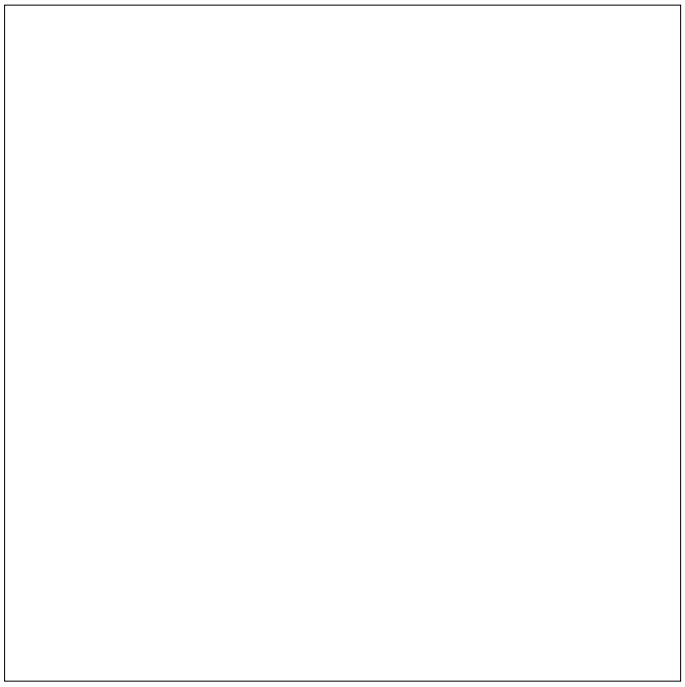

Interactive 3D graphic, click to activate and rotate.

PRODUCT SERIES SPECIFICATIONS

Series: PLC12
Category: General Purpose
Pressure: Vacuum to 120 psi, 8.3 bar
Temperature: 32°F-160°F (0°C-71°C)
Sterilization Method: Gamma: Up to 50 kGy irradiation
Material Compliance
Reach: Compliant
RoHS: Compliant

For more information see cpcworldwide.com or contact us at cpcworldwide.com/ContactUs

The 1/4" flow polypropylene PLC12 offers many of the same configuration options as the PLC. The polypropylene material adds greater chemical resistance for more demanding applications. PLC12 couplings are also gamma sterilizable. PLC12 coulings are also gamma sterilizable and available with optional RFID (Radio Frequency Identification) capability.

Features - Benefits

Polypropylene material - Chemically resistant and gamma sterilizable
EPDM o-rings - Greater chemical resistance
CPC thumb latch - One-hand connection and disconnection
Integral terminations - Fewer leak points, shorter assemblies, faster installations

PLC12 Pressure Range

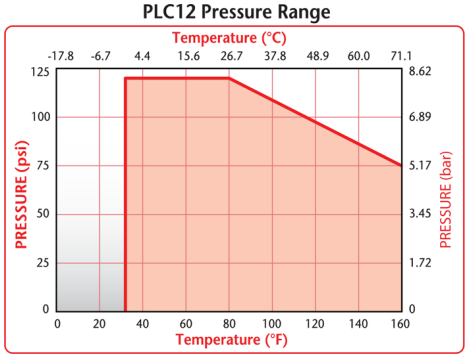

PLC12 Water Flow

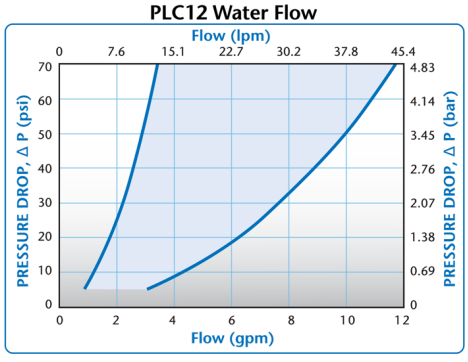

PLC12 Air Flow, 100 psig Inlet Pressure

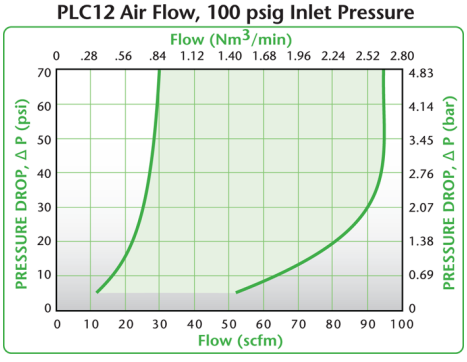

These graphs are intended to give you a general idea of the performance capabilities of each product line. Contact CPC for flow of a particular coupling combination.

PLCD2300412

Technical details:

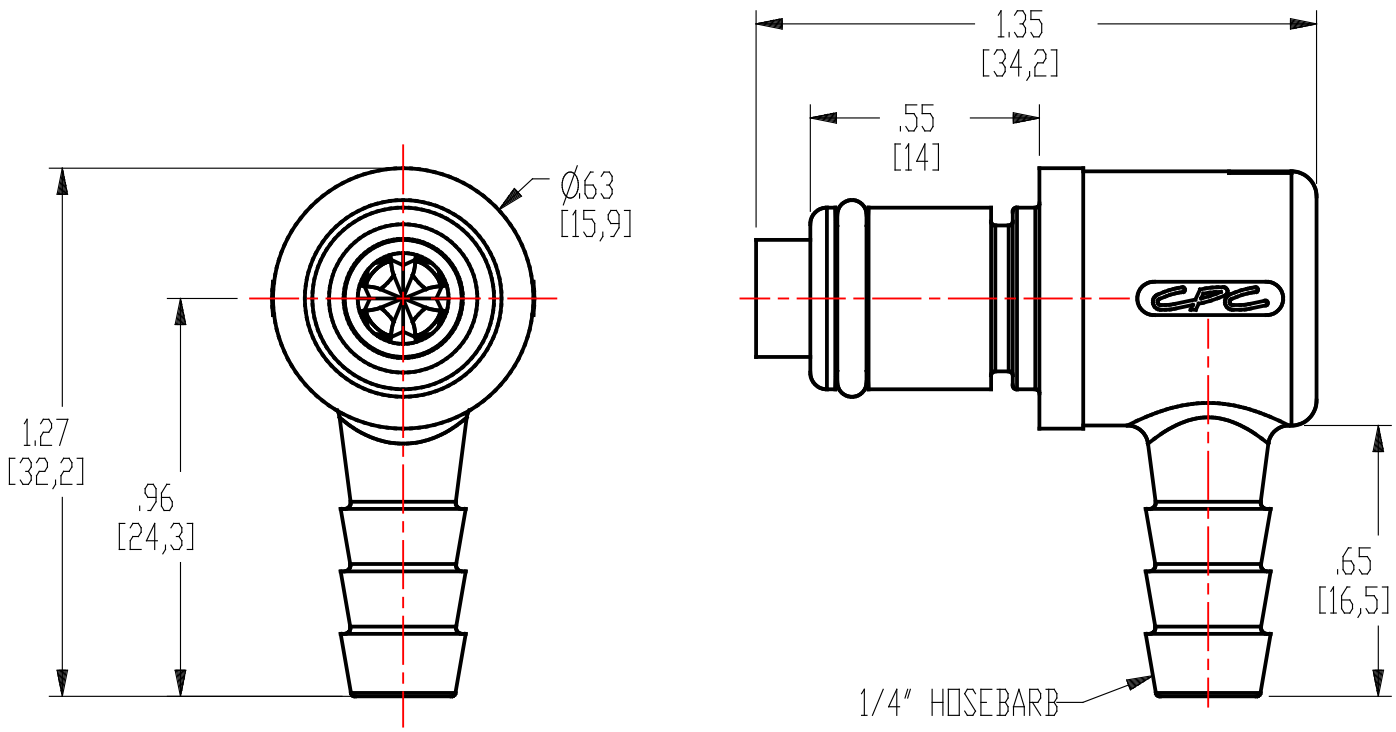

Description: 1/4" Hose Barb Valved Elbow Coupling Insert

Materials:

Main Components: Almond Polypropylene
Valve: Almond Polypropylene
Valve Spring: Stainless Steel
Seals: EPDM

Standard Packaging Quantity: 25