HFCD16812

Interactive 3D graphic, click to activate and rotate.

PRODUCT SERIES SPECIFICATIONS

Series: HFC12
Category: General Purpose
Pressure: Vacuum to 60 psi, 4.2 bar
Temperature: 32°F-160°F (0°C-71°C)
Material Compliance
Reach: Compliant
RoHS: Compliant

For more information see cpcworldwide.com or contact us at cpcworldwide.com/ContactUs

HFC12 Series couplings have flow comparable to many 1/2" flow couplings in a 3/8" body size. Compact and lightweight, HFC couplings replace bulky and heavy brass ball-and-sleeve couplings in a wide range of applications. An ergonomic design and a large, shrouded thumb latch pad produce a coupling that is easy to grip and simple to operate. An efficient valve design leads to high flow and low spillage.

Features - Benefits

High efficiency valve - More flow in a compact size
Ergonomic design - Easy to grip, simple to operate
Polypropylene material - Chemically resistant and gamma sterilizable
Compatible - Mates with HFC35 and HFC57 couplings

HFC12 Pressure Range

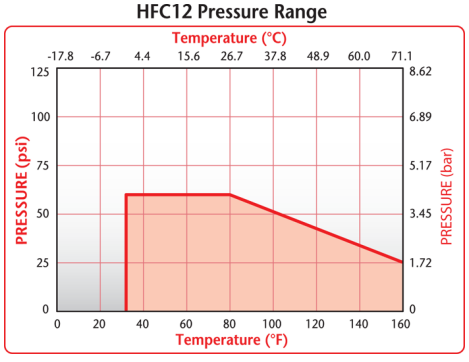

HFC12 Water Flow

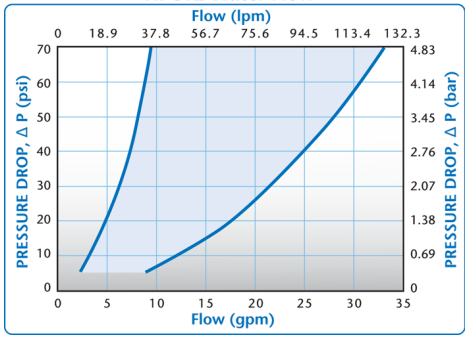

HFC12 Air Flow, 100 psig Inlet Pressure

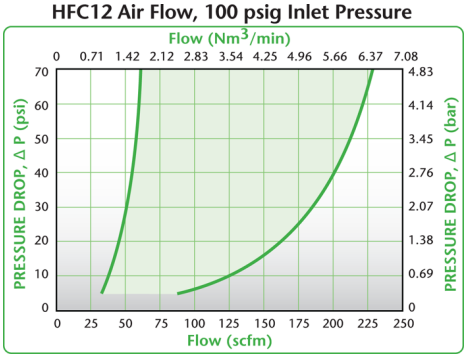

These graphs are intended to give you a general idea of the performance capabilities of each product line. Contact CPC for flow of a particular coupling combination.

Technical details:

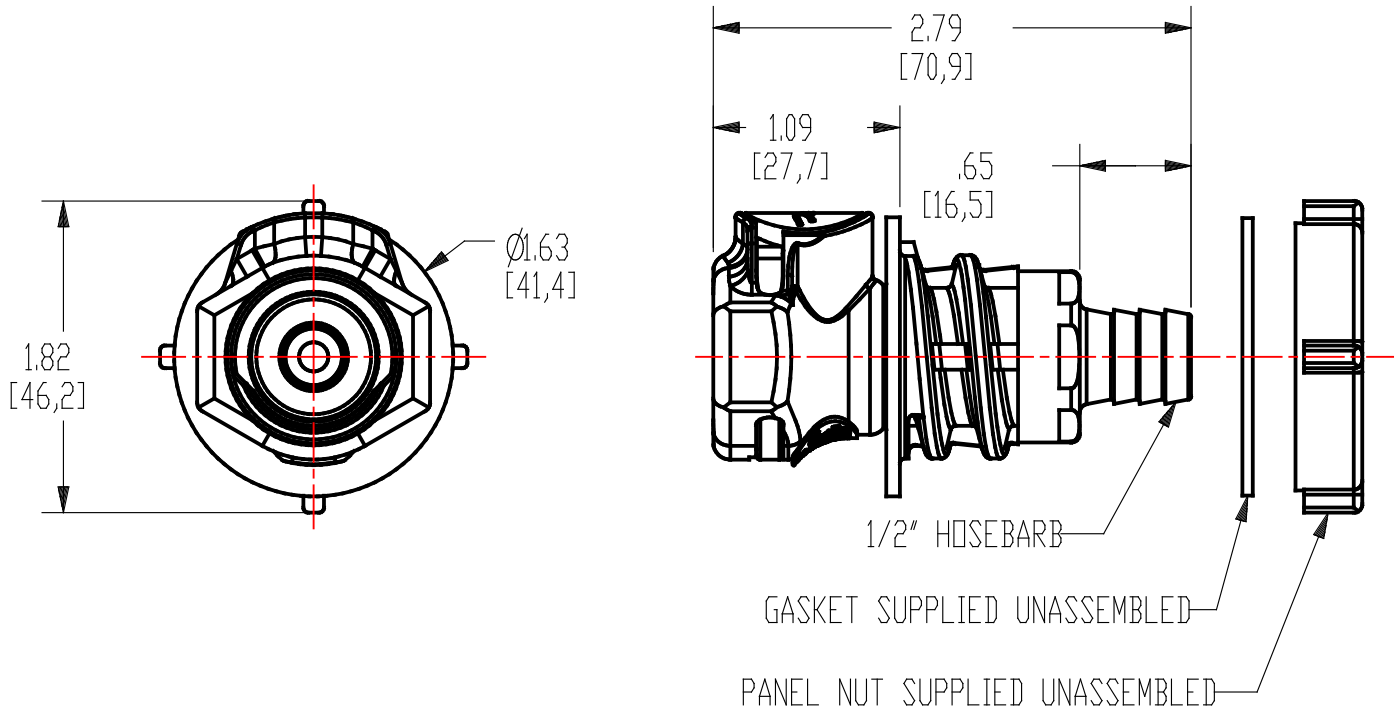

Description: 1/2" Hose Barb Valved Panel Mount Coupling Body

Materials:

Main Components: Gray Polypropylene
Valve: Gray Polypropylene
Thumb Latch: Dark Gray Polypropylene
Valve Spring: Stainless Steel
External Spring: Stainless Steel
Seals: EPDM
Others: Polypropylene panel nut and EPDM panel mount gasket

Standard Packaging Quantity: 10